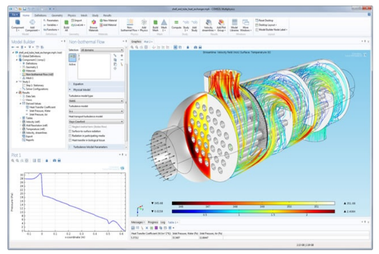

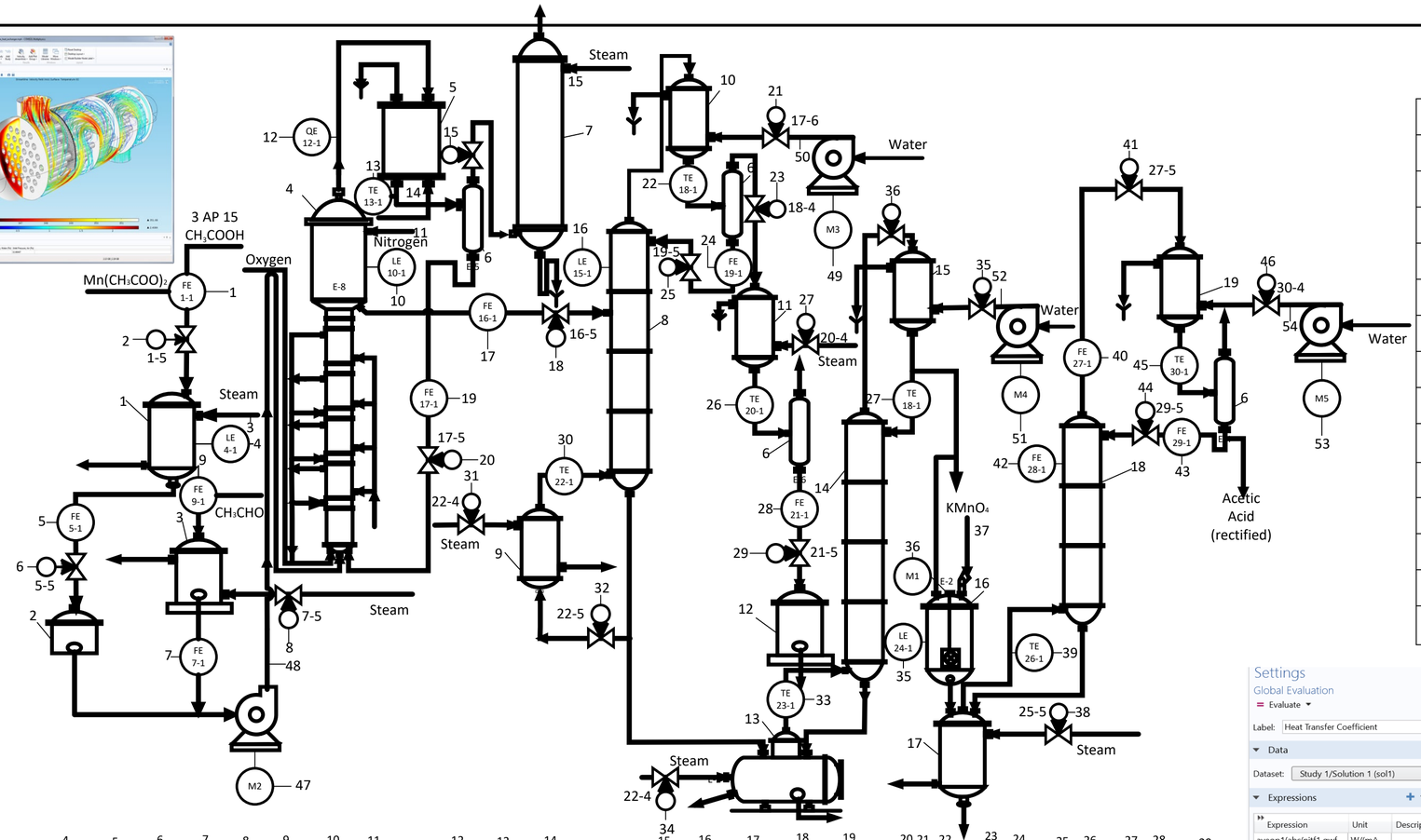


| Position. | Name of the process equipment | Quantity. |
|---|---|---|
| 1 | Catalyst dissolution apparatus | 1 |
| 2 | Intermediate tank | 1 |
| 3 | Acetaldehyde storage (CH3CHO*44.053 gmL-1) | 1 |
| 4 | Oxidation column | 1 |
| 5,11 | Capacitors | 2 |
| 6 | Separators | 1 |
| 7 | Scrubber | 1 |
| 8,14 | Plate distillation column | 2 |
| 9,13 | Boiler (water) | 2 |
| 10,15,19 | Deflagromator | 3 |
| 12 | Acid collector | 1 |
| 16 | Reactor | 1 |
| 17 | Evaporator | 1 |
| 18 | Packed distillation column | 1 |

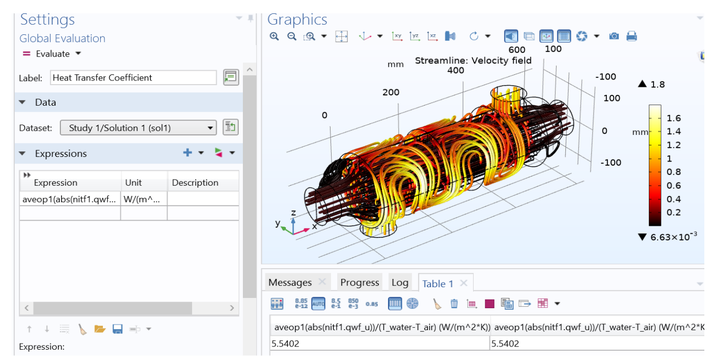


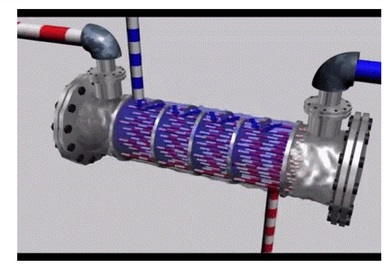

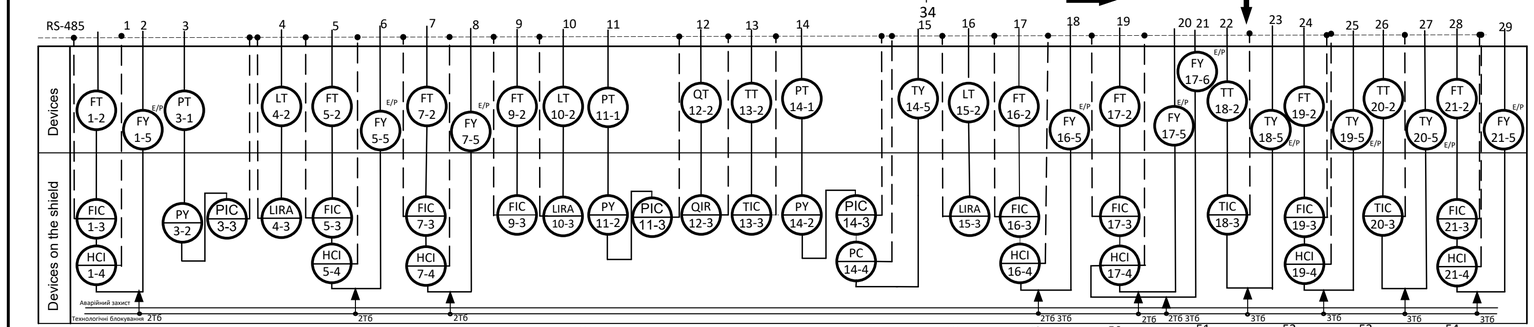


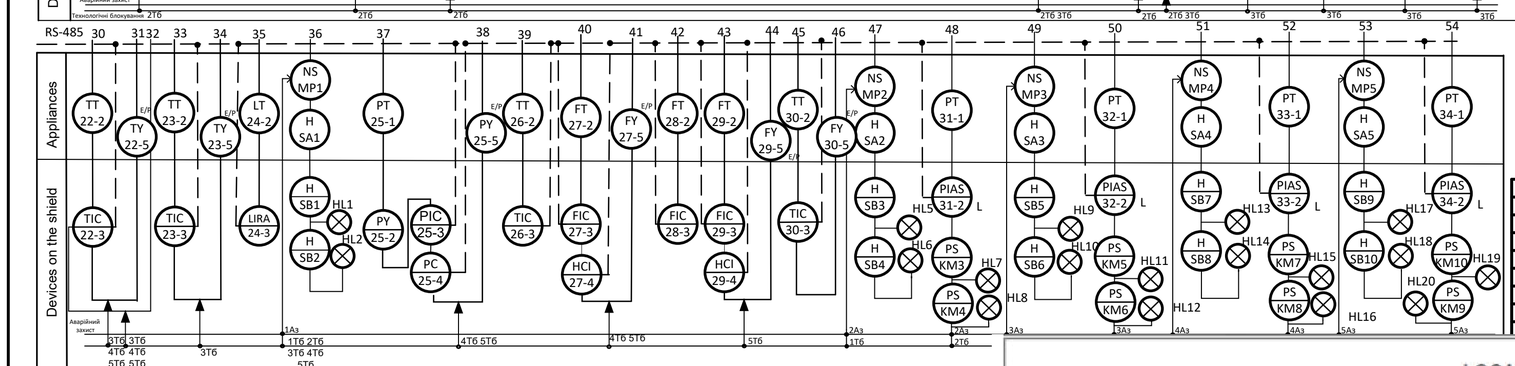


Technological blocks

| Арк. | Developer | Signature | Date |
|---|---|---|---|
| Name | Abisoe F.E. | Abisoe F.E. | |
| Assistant Supervisor | Tsapar V.S. | | |
| Contract Supervisor | | | |

DP / LA-61.6129.000.001.СхФ

Process automation scheme

| Лит. | Маса | Scale 10:1 |
|---|---|---|
| | | |

Аркуш | Аркушів

Production of acetic acid by oxidation of acetaldehyde
Functional scheme of automation (FSA)
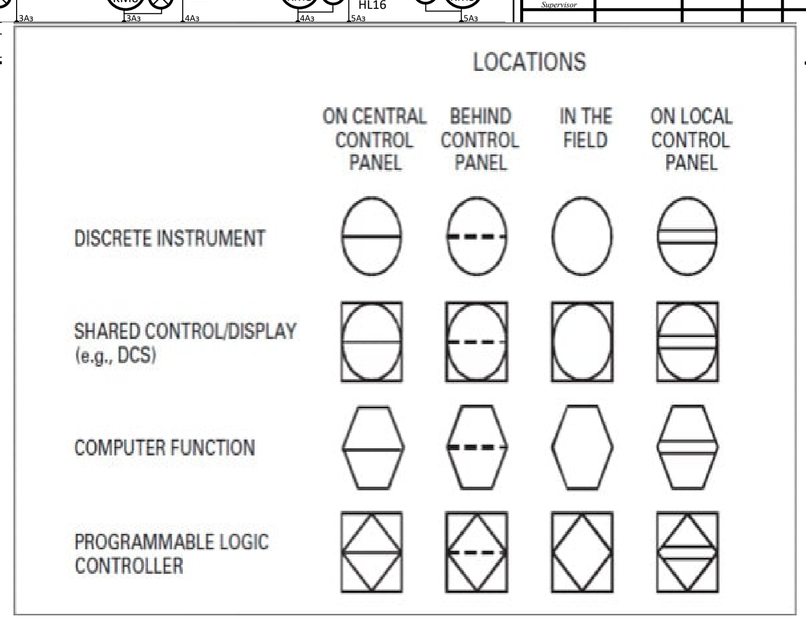
NTUU "KPI"
ChE LA-61